The information in this booklet must not be given to the public

British Rail | Train Crew Manual

"Westcode" Brake Control System & Associated Equipment

Issue 1

BR 33056/69

July 1980

CONTENTS

		Page
1.	Introduction – Westcode brake system	1
2.	Basic principle	1
	2.1 Spring parking brake	5
3.	Basic electrical circuit	5
	3.1 Brake continuity wire 13	5
	3.2 Emergency bypass switch	8
4.	Air suspension	12
	4.1 Levelling valve	12
	4.2 Compensating valve	14
	4.3 Averaging valve .	15
5.	Westcode brake unit	20
	5.1 Variable load valve	20
	5.2 3-step relay valve	25
	5.3 Restricted application valve	33
6.	The dynamic brake	39
	6.1 Basic principle	40
7.	Wheelslide protection	43

List of Illustrations

Fig.		Page
1	Westcode brake system – basic principle	2
2	Brake controller	3
3	Brake cylinder	4
4	Westcode brake system – basic electrical circuit	6
5	Emergency bypass switch	7
6	Motor bogie	10
7	Air suspension – basic components	11
8	Levelling valve – 'level'	12
9	Levelling valve – 'loading'	13
10	Levelling valve – 'unloading'	13
11	Compensating valve – closed	14
12	Compensating valve – open	14
13	Averaging valve	17
14	Averaging valve – 'balanced'	18
15	Averaging valve – 'exhaust'	19
16	Westcode brake unit – motor coaches without dynamic braking and trailer coaches	20
17	Variable load valve – 'open'	21
18	Variable load valve – 'balanced'	22
19	Variable load valve – 'exhaust'	23
20	Variable load valve – 'air suspension failed'	24
21	Three step relay valve – 'release'	27
22	Three step relay valve – 'Step 1'	28
23	Three step relay valve – 'Lap'	29
24	Three step relay valve – 'Step 2'	30
25	Three step relay valve – 'Step 3'	31
26	Westcode brake unit – motor coaches with dynamic braking	33
27	Restricted application valve – 'initiate braking'	34
28	Restricted application valve – 'dynamic brake in use'	35
29	Restricted application valve – 'balanced'	36
30	Restricted application valve – 'brake release'	37
31	Restricted application valve – 'dynamic brake not operative'	38
32	Dynamic brake – principle	42
33	WSP blowdown valve – 'normal'	43
34	WSP blowdown valve – 'exhaust'	44

1. INTRODUCTION

The 'Westcode' is an automatic 3-step brake control system which is not compatible with any other type. The brakes are actuated by brake control units on the vehicles controlled by three Westcode train wires, two being positive wires and the third being the negative return. These must be energised to release the brakes and then de-energised in a coded sequence to apply them. These train wires, and in particular train wire 13, take the place of the brake pipe of a conventional two-pipe system and provide a 'fail-safe' system i.e. if the wires are de-energised for any reason a brake application results. Therefore only a main reservoir pipe is required to feed the individual brake control units. The train wires are switched by the driver's brake controller via a code conversion unit and it is this feature together with the name of the manufacturer, Westinghouse, that gives the system its name 'Westcode'.

2. BASIC PRINCIPLE

Fig. 1 shows the system applied to a typical 3-car e.m.u. train, the compressor and main reservoir being located on one of the motor coaches and supplying the train via the main reservoir pipe and the usual flexible hoses between vehicles of the 3-car set. The main reservoir pipe connection between two sets is made by the Tightlock coupling, no flexible hoses are required. Provision has been made on later builds of train, such as the Class 210 and 315, for a Schrader 'plug-in' connection so that by use of an emergency brake hose air can be supplied from another traction unit with the standard main reservoir pipe hose connections.

Main reservoir pressure is then supplied to the air supply manifold of each vehicle and thence to the brake supply reservoir and Westcode brake unit.

The brake controller in use is supplied from the battery via the master switch, this ensures that the brake controller handles in all unoccupied driving compartments are inoperative other than in the 'emergency' position (see fig. 2).

The driver's brake controller is basically an electric switch, the shaft operating snap action switches by means of cams. The positive notches on the brake controller are assured by the detent cam which enables the driver to locate the desired position.

Fig.1 Westcode brake system

Basic principle

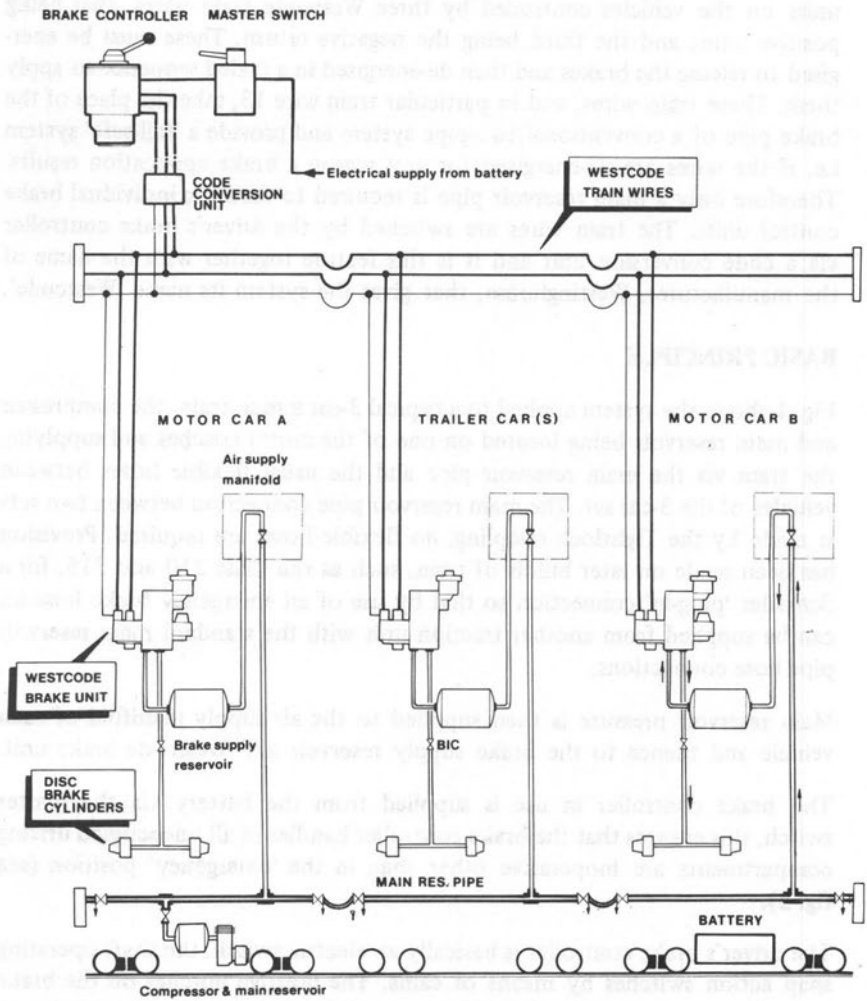

Fig.2 Brake controller

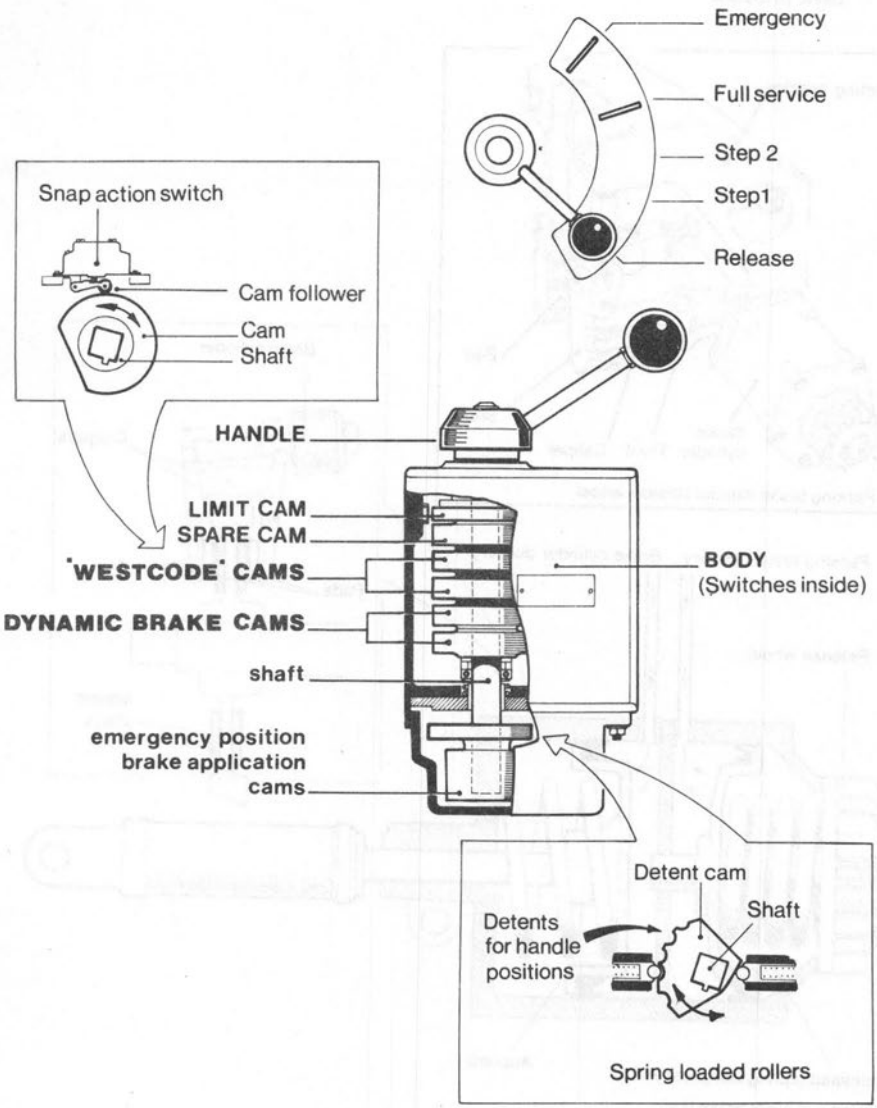

Fig.3 Brake cylinder

with integral parking brake

Basic principle

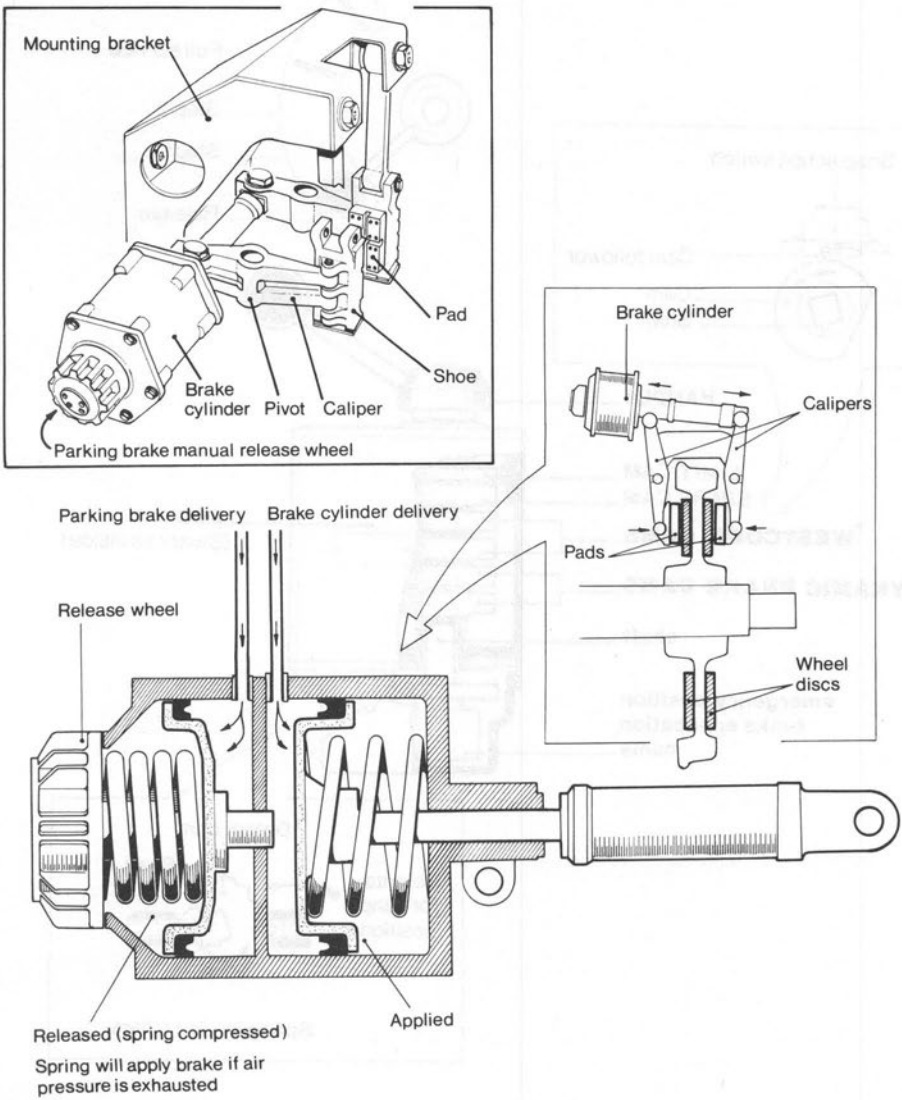

The two 'Westcode' cams de-energise the train wires in a coded sequence through the code conversion unit which activates the brake unit on each vehicle, thus air pressure determined by the position of the brake controller is passed to the disc brake cylinders (see fig. 3).

2.1 Spring Parking Brake

There is no conventional handwheel-applied parking brake on these trains, instead the brake cylinders fitted to the motor coaches are provided with an integral parking brake (see fig. 3). Air pressure is supplied to, or exhausted from, the brake cylinders through e.p. valves operated electrically by push buttons in the driving compartments, or manually by buttons in the parking brake equipment cupboard in the vestibule adjacent to the driving compartments. It will be seen that the parking brakes are held OFF by air pressure, thus providing a 'fail-safe' feature in that any loss of pressure will cause the spring to apply the brake.

3. BASIC ELECTRICAL CIRCUIT

Fig. 4 shows a basic electrical circuit, the brake controller in use in the front cab taking its electrical supply from the battery via the brake continuity wire (train wire 13). This train wire runs the full length of the train and, as its name implies, proves the continuity of the train as only then is the brake controller energised to enable the brakes to be released.

3.1 Wire 13 therefore requires the following contacts/switches to be closed before the brake controller can be energised:

3.1.1 The electro-pneumatic control MCB (EPCB) in the rear cab.

3.1.2 Contacts DS34 on the drum switch of the rear motor coach.

3.1.3 The master switch at OFF in the rear cab.

3.1.4 The brake controller handle at any position other than EMERGENCY in the rear cab.

3.1.5 The trip gear governor/pressure switch (TGG) – where fitted – closed on the rear motor coach.

3.1.6 The main reservoir governor (MRG)/low main air governor (LMA) on the rear motor coach.

Fig.4 Westcode brake system

Basic electrical circuit

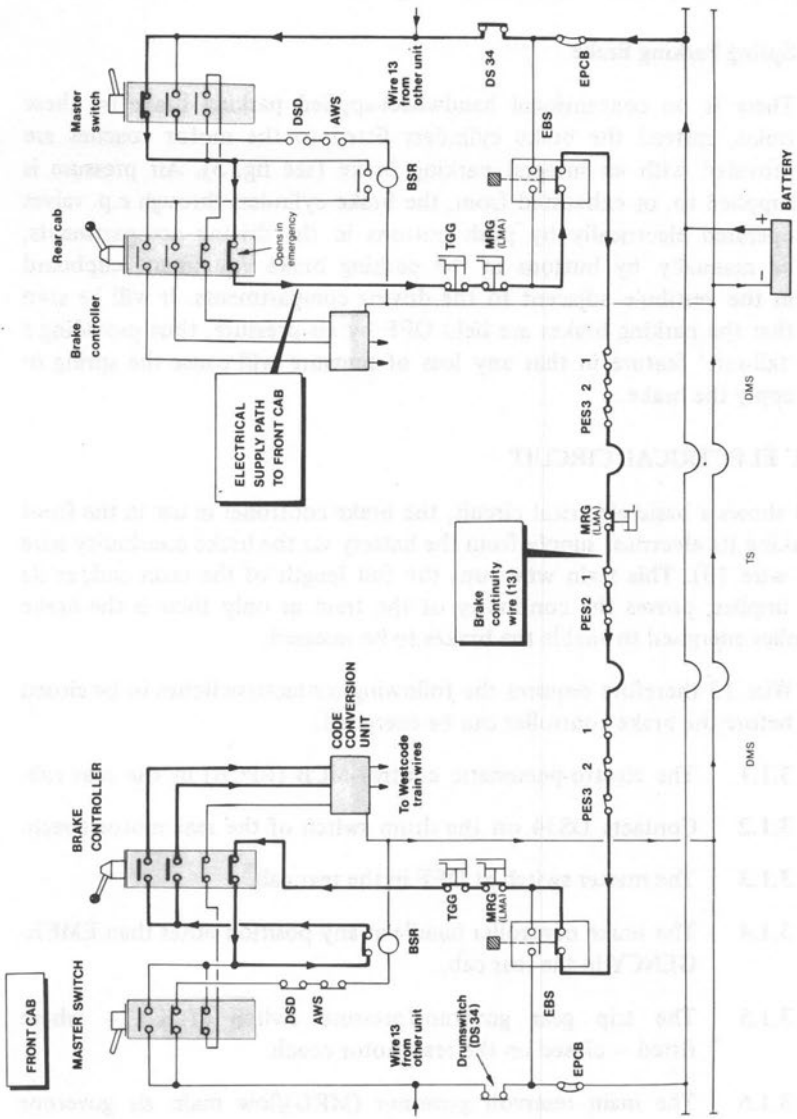

Fig.5 Emergency bypass switch

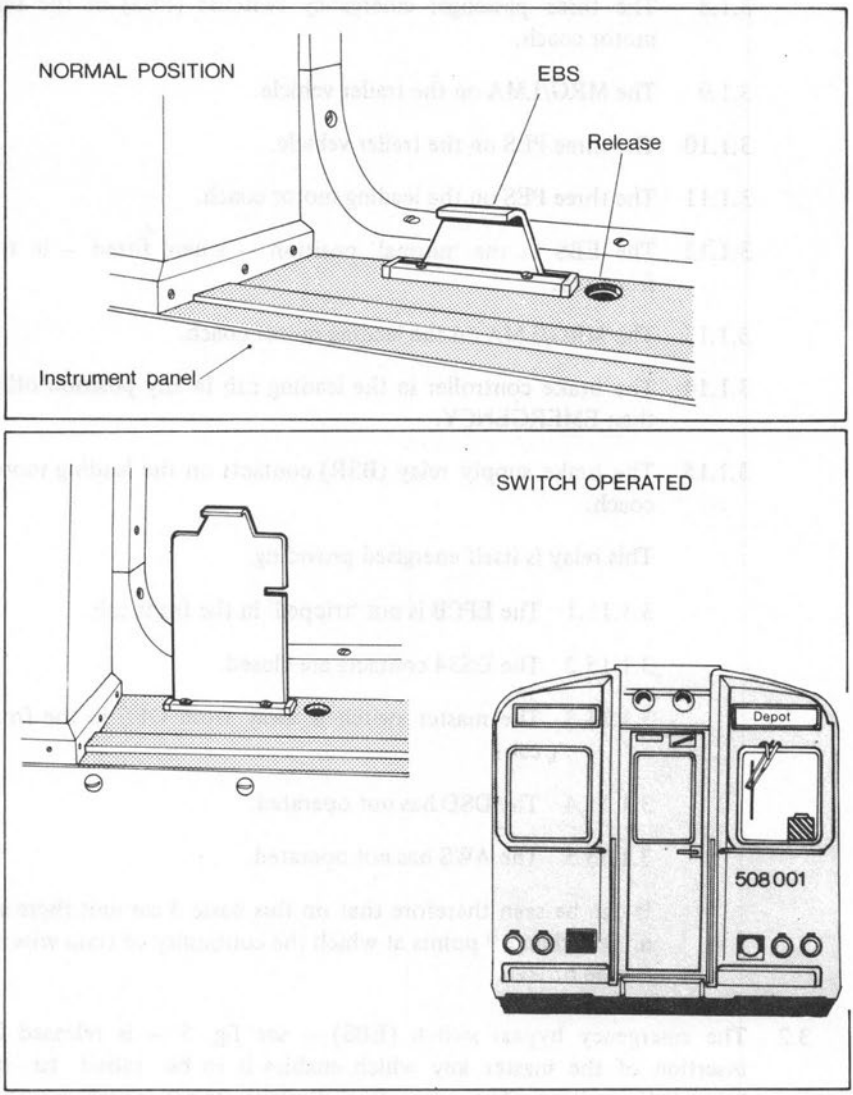

3.1.7 The emergency bypass switch (EBS) in the 'normal' position – where fitted – in the rear cab.

3.1.8 The three passenger emergency switches (PES) in the rear motor coach.

3.1.9 The MRG/LMA on the trailer vehicle.

3.1.10 The three PES on the trailer vehicle.

3.1.11 The three PES on the leading motor coach.

3.1.12 The EBS in the 'normal' position – where fitted – in the front cab.

3.1.13 The MRG/LMA on the leading motor coach.

3.1.14 The brake controller in the leading cab in any position other than EMERGENCY.

3.1.15 The brake supply relay (BSR) contacts on the leading motor coach.

This relay is itself energised providing:

3.1.15.1 The EPCB is not 'tripped' in the front cab.

3.1.15.2 The DS34 contacts are closed.

3.1.15.3 The master switch is away from OFF in the front cab.

3.1.15.4 The DSD has not operated.

3.1.15.5 The AWS has not operated.

It can be seen therefore that on this basic 3 car unit there are no less than 19 points at which the continuity of train wire 13 can be broken.

3.2 The emergency bypass switch (EBS) – see fig. 5 – is released by insertion of the master key which enables it to be raised to the 'operated' position. The outer face displays stripes which are then visible through the cab window. It will be seen that if this is operated in the leading cab (fig. 4) a supply is taken direct from the battery via

the EPCB in the leading cab, with only MRG/LMA, TGG and BSR in circuit to the brake controller, all other points where the continuity of train wire 13 could have been broken are then bypassed by this switch. It must therefore only be used in an emergency situation in accordance with the Working Instructions for the class of unit concerned, to enable a train to be cleared from running lines when the continuity of train wire 13 cannot be otherwise restored.

Fig.6 Motor Bogie BX1

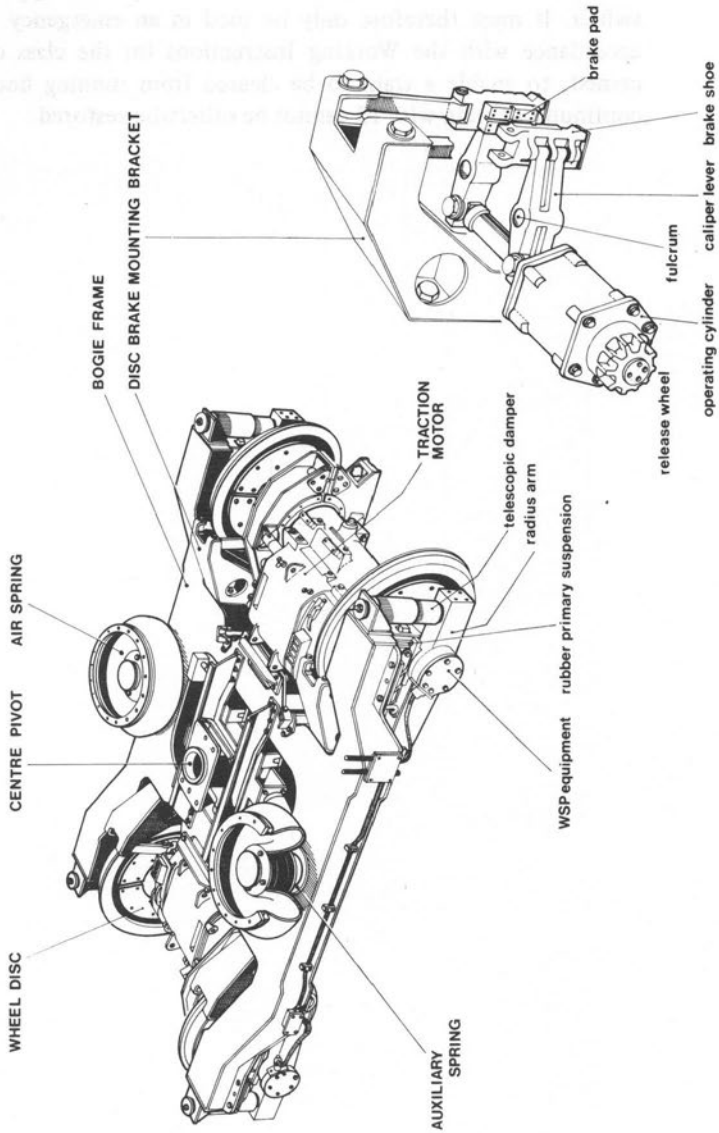

Fig.7 Air Suspension

Basic components

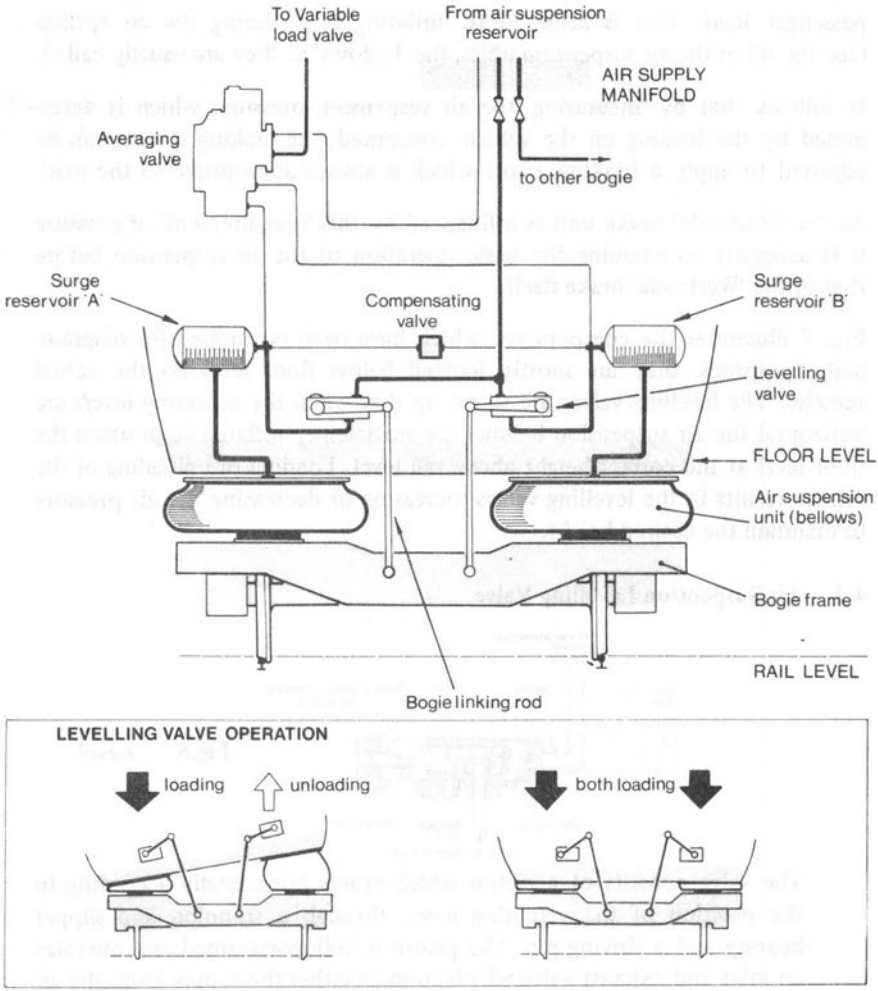

4. AIR SUSPENSION

The braking system is also related to the air suspension fitted to the bogies of these multiple unit trains, which is designed to keep the floor level of individual vehicles relatively constant to the running rails, irrespective of passenger load. This is achieved by inflating or deflating the air springs (see fig. 6) of the air suspension units, the 'bellows' as they are usually called.

It follows that by 'measuring' the air suspension pressure, which is determined by the loading on the vehicle concerned, the braking system can be adjusted to apply a braking effort which is always appropriate to the load.

As the 'Westcode' brake unit is influenced by this 'measurement' of pressure it is necessary to examine the basic operation of the air suspension before that of the 'Westcode' brake itself.

Fig. 7 illustrates the components, which have been positioned for diagrammatic purposes, they are mostly located below floor level on the actual vehicles. The levelling valves are so set up that when the actuating levers are horizontal the air suspension bellows are sufficiently inflated to position the floor level at the correct height above rail level. Loading or unloading of the vehicle results in the levelling valves increasing or decreasing the air pressure to maintain the desired height.

4.1 Air Suspension Levelling Valve

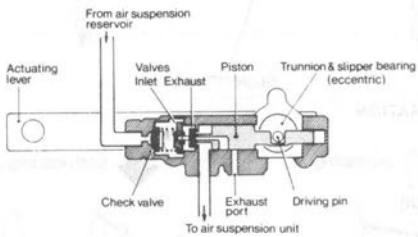

Fig.8 Level

The valve consists of a piston which moves horizontally according to the position of the actuating lever, through a trunnion and slipper bearing and a driving pin. The piston is hollow-stemmed and operates an inlet and exhaust valve which connect either the supply from the air suspension reservoir to the bellows, or the bellows to exhaust. When the floor level of the vehicle is at the desired height the actuating lever is horizontal, the inlet valve and check valve are closed by the spring between them and the exhaust valve is closed by air pressure trapped in the valve.

Fig.9 Loading

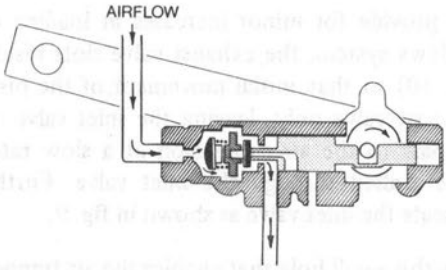

Consider a large number of passengers joining the vehicle, as portrayed at the foot of fig. 7, their weight will compress the bellows and the body of the levelling valves will 'fall'. As the end of the actuating lever is linked to the bogie frame the actuating lever assumes the 'loading' position as shown in fig, 9 above. Thus the trunnion and slipper bearing turns and the driving pin moves the piston to the left, pushing the exhaust valve and inlet valve off their seats to allow air to pass to the bellows. Thus the bellows are further inflated to counter the extra weight of the passengers joining and the body of the levelling valves 'rise' with the suspension until the actuating lever again becomes horizontal as depicted in fig. 8 and further air flow to the bellows is cut off.

Fig.10 Unloading

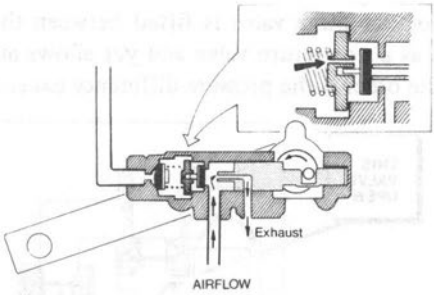

Consider a large number of passengers leaving the vehicle, the body of the levelling valve will now 'rise' and the actuating lever assumes the 'unloading' position as shown in fig. 10 above. Now the piston has been drawn to the right and the hollow-stem is unseated from the exhaust valve to allowing air from the bellows to exhaust. The bellows will now deflate to compensate for the loss of weight of the passengers that have left the train and the body of the valve will 'fall' until the actuating lever is once more horizontal in the 'level' position (fig. 8) and no further air is exhausted from the bellows.

To provide for minor increases in loading or slight leakage from the bellows system, the exhaust valve slots inside the inlet valve (see inset fig. 10) so that initial movement of the piston to the left unseats the exhaust valve only, leaving the inlet valve on its seat and allowing air to pass to the air suspension at a slow rate determined by the small hole drilled through the inlet valve. Further movement to the left unseats the inlet valve as shown in fig. 9.

It is this small hole that enables the air trapped in the valve to retain the exhaust valve on its seat as shown in fig. 8.

4.2 Compensating Valve

Fig.11

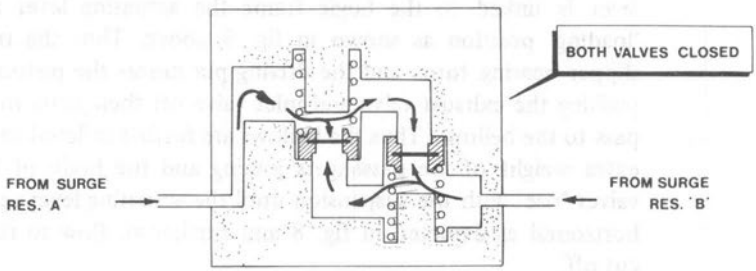

A compensating valve is fitted between the two surge reservoirs. This acts as a non-return valve and yet allows air to pass from one reservoir to the other if the pressure difference exceeds 18 p.s.i.

Fig.12

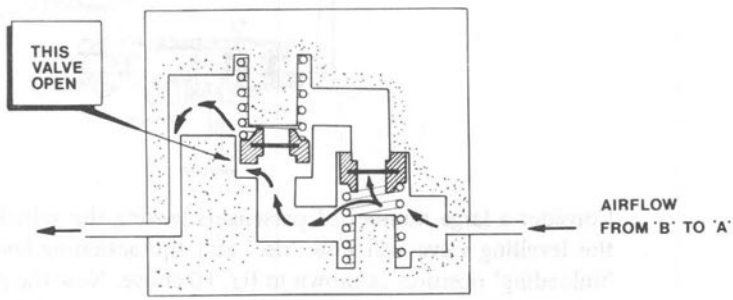

If, for example, the pressure in reservoir 'A' becomes more than 18 p.s.i. less than that in 'B', the left hand valve becomes unbalanced and opens when the force (pressure x area) below the valve exceeds the effect of the spring and the force (pressure x area) above, allowing air to pass from 'B' to 'A' – see fig. 12.

4.3 An averaging valve is fitted to one bogie of each vehicle and 'measures' the pressure in each air suspension unit bellows and produces an average pressure (a control pressure) which is then supplied to the variable load valve of the 'Westcode' unit.

Consider a bogie in a laden condition, the air pressure in each bellows unit will have been determined by the levelling valves and each is fed to the averaging valve (fig. 13). Pressure from the r.h. bellows enters chamber 'H' between the lower diaphragms whilst that from the l.h. bellows enters chamber 'G' below them. The relative sizes of the two lower diaphragms are such that the pressure in 'H', acting both upwards and downwards, together with that in 'G' acting upwards, produces an upward effort on the stem equal to an average of the pressures from the r.h. and l.h. bellows.

The stem lifts the upper diaphragm guide which in turn closes the exhaust valve and opens the inlet valve. Air from the air suspension reservoir is then allowed to pass to the variable load valve of the 'Westcode' brake unit and also to the upper chamber 'C' and the capacity chamber. This feature gives stability to the averaging valve which is not then affected by any surges in the air suspension system, further capacity being afforded by the surge reservoirs mentioned in item 4.2.

Thus the downward pressure in chamber 'C' will balance the upward effort on the stem, and the averaging valve will assume the 'balanced' position shown in fig. 14. Here the inlet valve has closed, the exhaust valve is seated on the hollow-stem of the upper diaphragm guide, and a pre-determined control pressure appropriate to the load of the vehicle is maintained to the brake unit.

A change in bellows pressure is reflected in chambers 'G' and 'H' and the stem is either raised again to open the inlet valve and thereby increase the control pressure to the brake unit (see fig. 13) or the stem is lowered so that the upper diaphragm guide unseats the exhaust valve and reduces the control pressure (fig. 15). When the pressure on the upper diaphragm again balances that produced by the average of the pressures in chambers 'G' and 'H' the valve once again assumes the 'balanced' position – fig. 14.

Note that an immediate reduction in control pressure is obtained via the hollow stem of the upper diaphragm guide, since pressure from

chamber 'C' and the capacity chamber can only exhaust via the choke and thus positive opening of the exhaust valve is assured.

It will be seen that the compensating valve, the surge reservoirs and the averaging valve together influence the control pressure present at the 'Westcode' brake unit and thereby a brake pressure is produced which is automatically compensated according to load. This ensures that a comparatively lightweight train will have consistent stopping distances irrespective of passenger loading. There will be other benefits in that tyre life will increase as the number of 'flats' brought about by too high a braking rate will be reduced i.e. wheels that have 'picked up' through insufficient weight being available for effective adhesion.

Fig.13 Averaging Valve

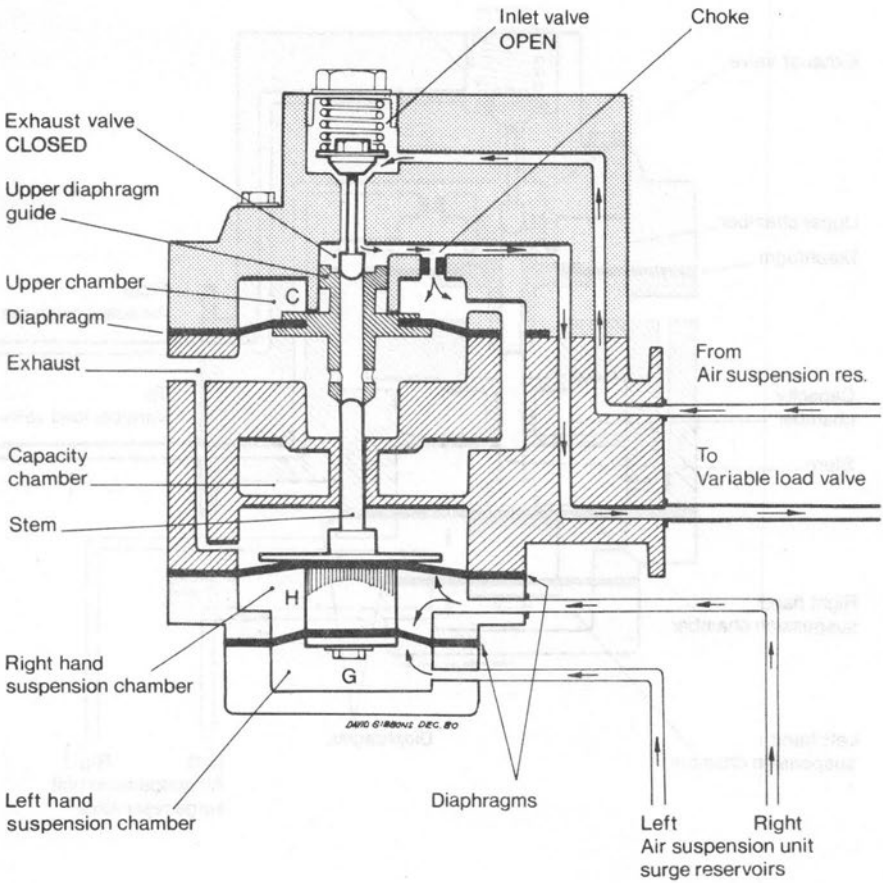

Fig.14 Balanced

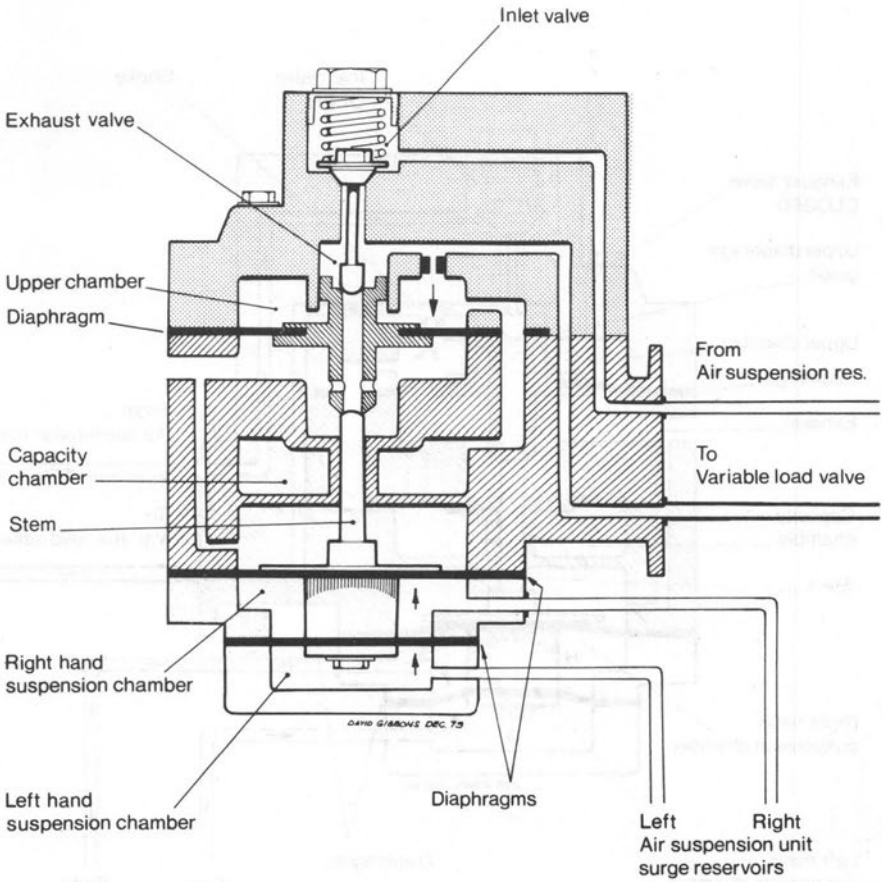

Fig.15 Exhaust

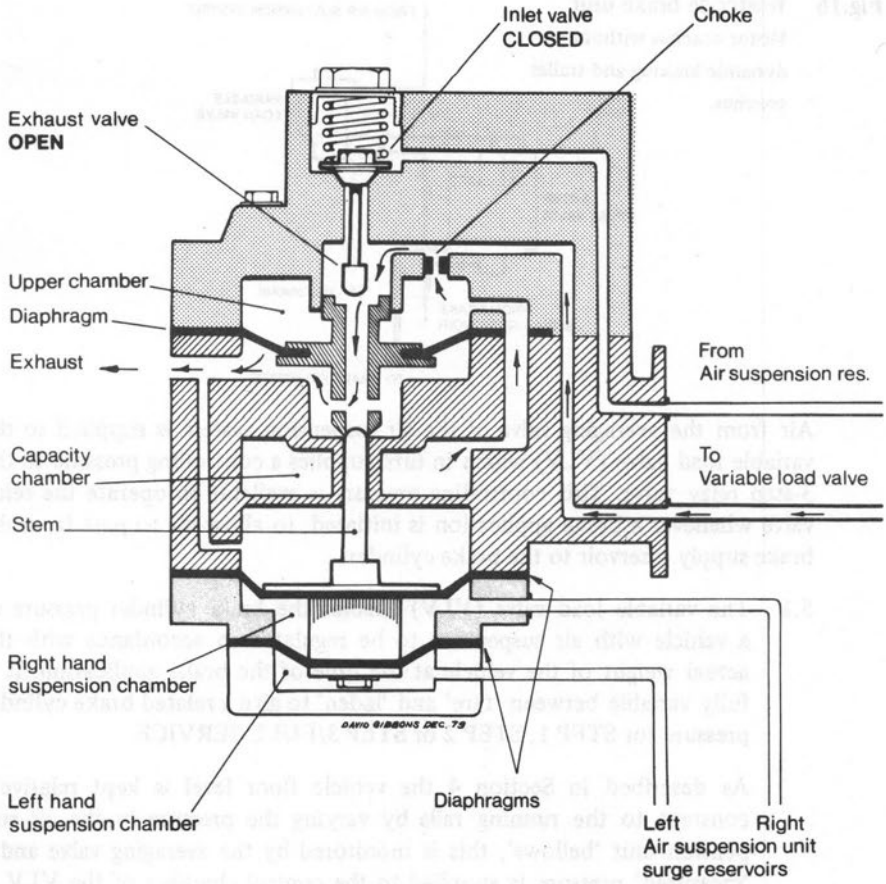

5. WESTCODE BRAKE UNIT

This consists of a variable load valve, a 3-step relay valve and (when dynamic braking is used) a restricted application valve all mounted on a pipe bracket suspended from the underframe of each vehicle.

Fig.16 Westcode brake unit
Motor coaches without dynamic braking and trailer coaches.

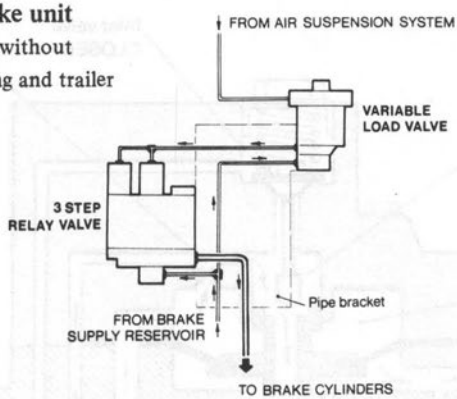

Air from the averaging valve of the air suspension system is supplied to the variable load valve (VLV) which in turn supplies a controlling pressure to the 3-step relay valve. This controlling pressure is available to operate the relay valve whenever a brake application is initiated, to allow air to pass from the brake supply reservoir to the brake cylinder.

5.1 The variable load valve (VLV) enables the brake cylinder pressure of a vehicle with air suspension to be regulated in accordance with the actual weight of the vehicle at the time of the brake application. It is fully variable between 'tare' and 'laden' to give a related brake cylinder pressure for STEP 1, STEP 2 or STEP 3/FULL SERVICE.

As described in Section 4 the vehicle floor level is kept relatively constant to the running rails by varying the pressure in the air suspension unit 'bellows', this is monitored by the averaging valve and a 'measured' pressure is supplied to the control chamber of the VLV – see fig. 17.

This pressure acts upon the lower control diaphragm to push the stem down which in turn opens the inlet/exhaust valve to allow air to pass from the brake supply reservoir to the 3-step relay valve and to the underside of the balancing diaphragm. When the upward pressure on the stem balances the downward pressure of the control diaphragm,

Fig.17 Variable load valve Open

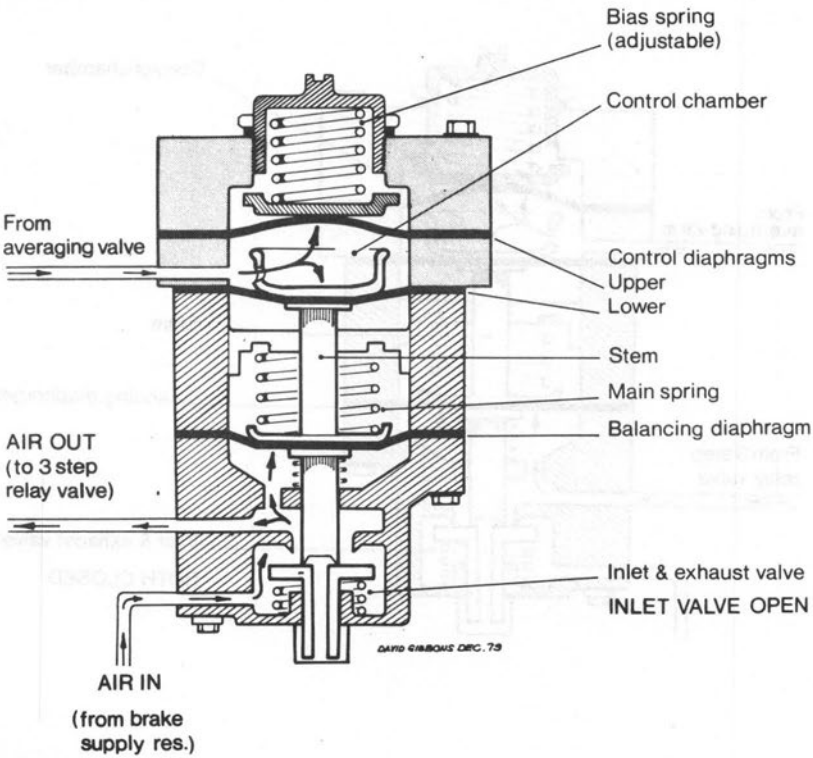

Fig.18 Variable load valve
Balanced
(Lapped)

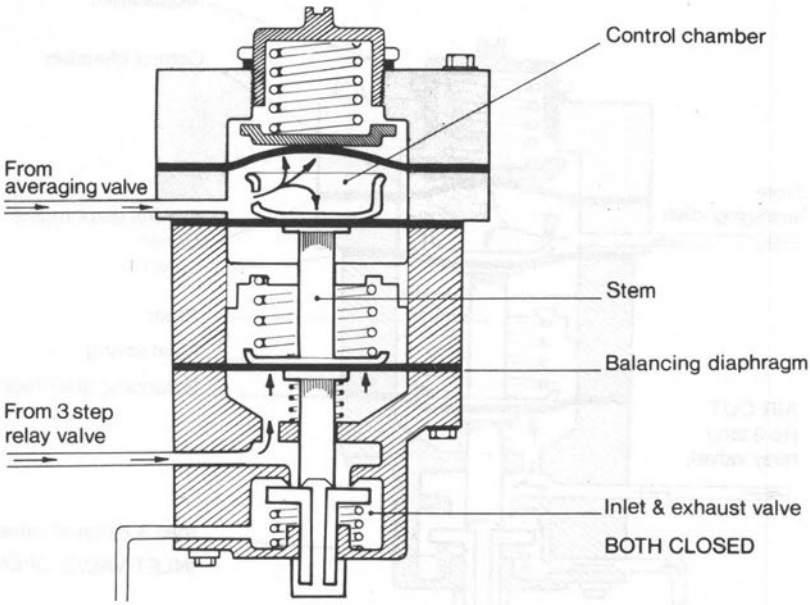

Fig.19 Variable load valve
Exhaust

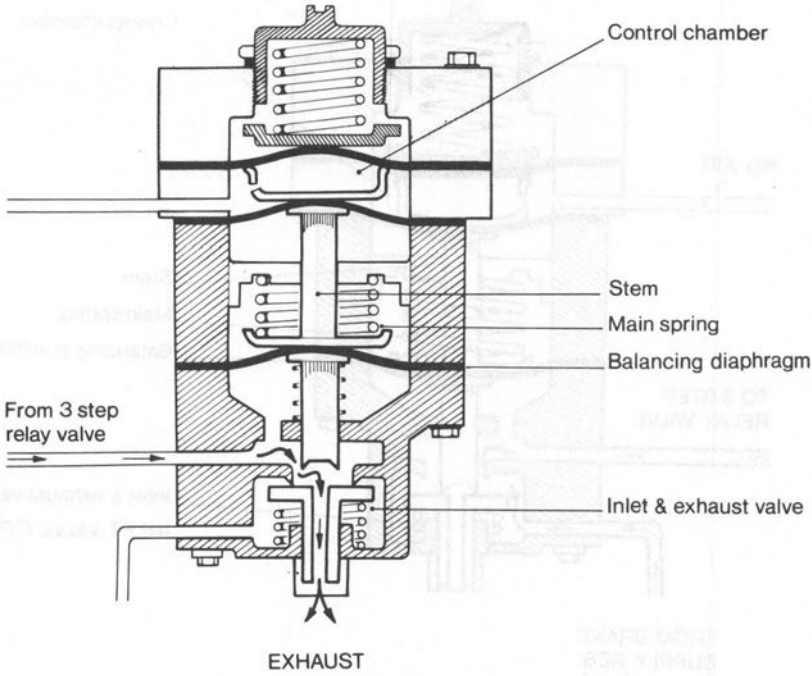

Fig.20 Variable load valve
Air suspension failed

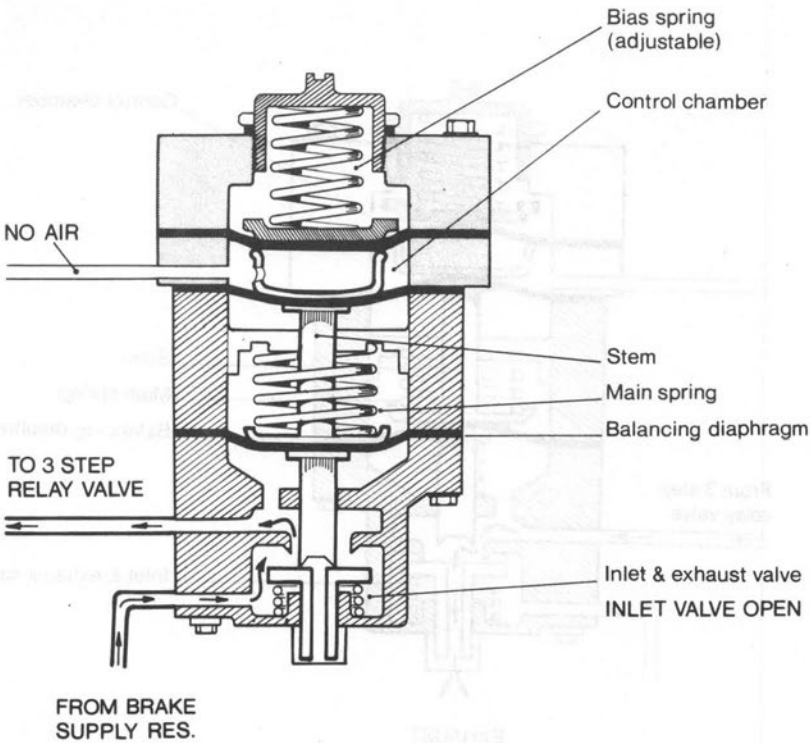

together with that of the main spring, the stem will rise allowing the inlet/exhaust valve to close and the VLV assumes a 'balanced' or 'lapped' position – see fig. 18.

Thus the controlling pressure to the relay valve is maintained and adjusted to suit changes in the loading of the vehicle. For example on arrival at a terminal station the vehicles empty and the air suspension 'bellows' will adjust to suit the 'tare' condition, this is monitored by the averaging valve and the pressure in the control chamber of the VLV will reduce. The upward pressure on the balancing diaphragm will now be greater (see fig. 19) and the stem will rise, allowing the controlling pressure from the relay valve to exhaust via the hollow-stem of the inlet/exhaust valve until such time that the upward pressure under the balancing diaphragm again balances the reduced pressure in the control chamber, when the VLV will again assume the 'balanced' position – see fig. 18.

In the event of a failure of the air suspension system the 'bellows' will be deflated and there will be no pressure at all in the control chamber of the VLV. In the condition the bias spring pushes the two control diaphragms together (see fig. 20) so that the stem is pushed down to unseat the inlet/exhaust valve to allow air to pass to the relay valve. When the air pressure under the balancing diaphragm equals the combined downward pressure of the bias spring and the main spring the VLV assumes the 'balanced' position – fig. 18. The spring pressures are so adjusted that, with the air suspension deflated, the brake cylinder pressure obtainable is equivalent to that of a vehicle in fully-laden condition, irrespective of its actual condition.

5.2 Fig. 16 shows the relationship between the variable load valve (VLV) and the 3-step relay valve, it is the latter which actually produces brake cylinder pressure by connecting the brake supply reservoir to the brake cylinders when a brake application is made. As its name implies, the relay valve simply 'relays' an electrical signal from the brake controller to the brake cylinders as air pressure.

The 3-step relay valve contains a number of diaphragms, each having a different effective surface area. The uppermost diaphragm in association with chamber 'C' (fig. 21) has an area equivalent to 4 units of force, whilst that below controlled by chamber 'B' is equal to 6 units of force. The control chambers may be filled or exhausted by the

electro-pneumatic valves on the top of the relay valve i.e. e.p. valve 'C' connects to chamber 'C' and valve 'B' to chamber 'B'. The e.p. valves are energised by the driver's brake controller as described in Section 2. In this particular application the relay valve is required to provide three braking steps only, therefore control chamber 'A' is not used and a connection is made through the diaphragm and to atmosphere, rendering it ineffective. By the provision of a further e.p. valve and bringing chamber 'A' into use further braking steps are available.

In the RELEASE position both e.p. valves are energised – see fig. 21 – therefore both chambers 'B' and 'C' are vented to atmosphere, as are the brake cylinders via the hollow stem of the inlet/exhaust valve.

Fig.21 Three step relay valve Release

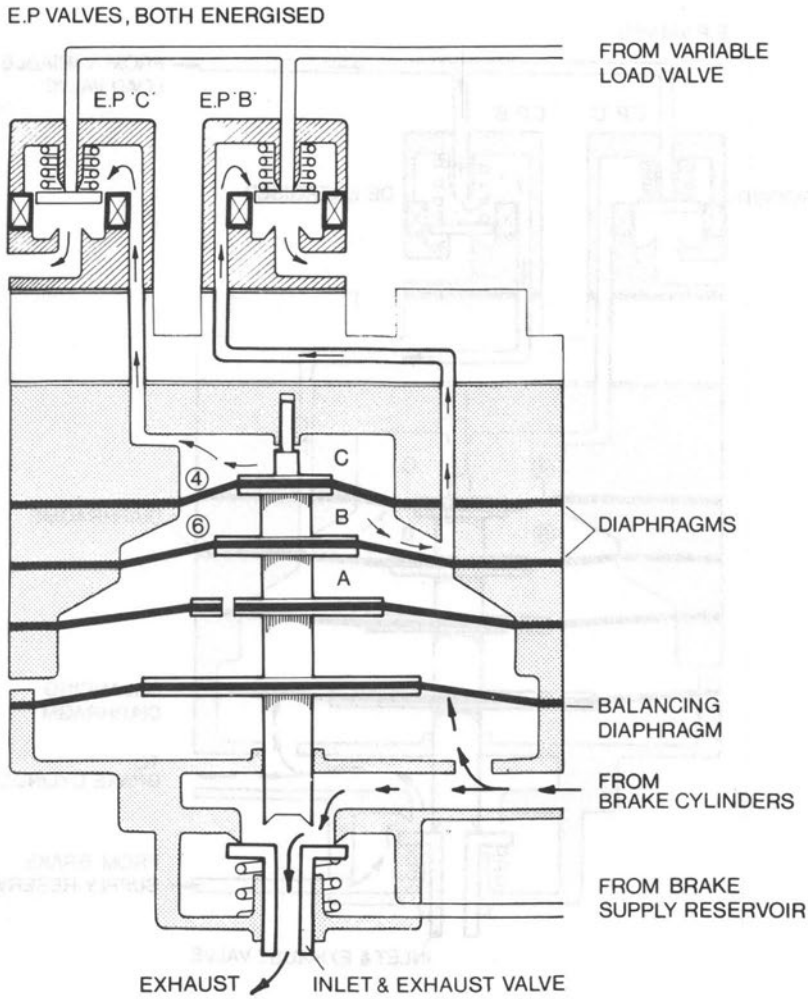

Fig.22 Three step relay valve
Step 1.

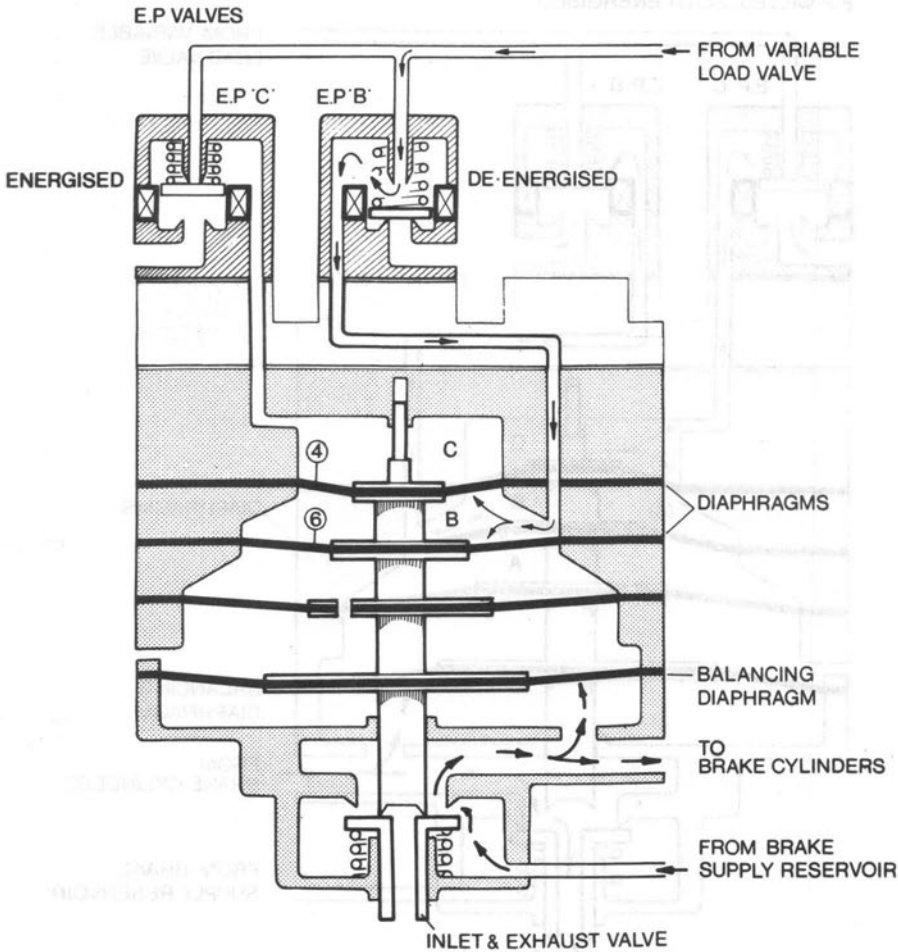

Fig.23 Three step relay valve
Lap

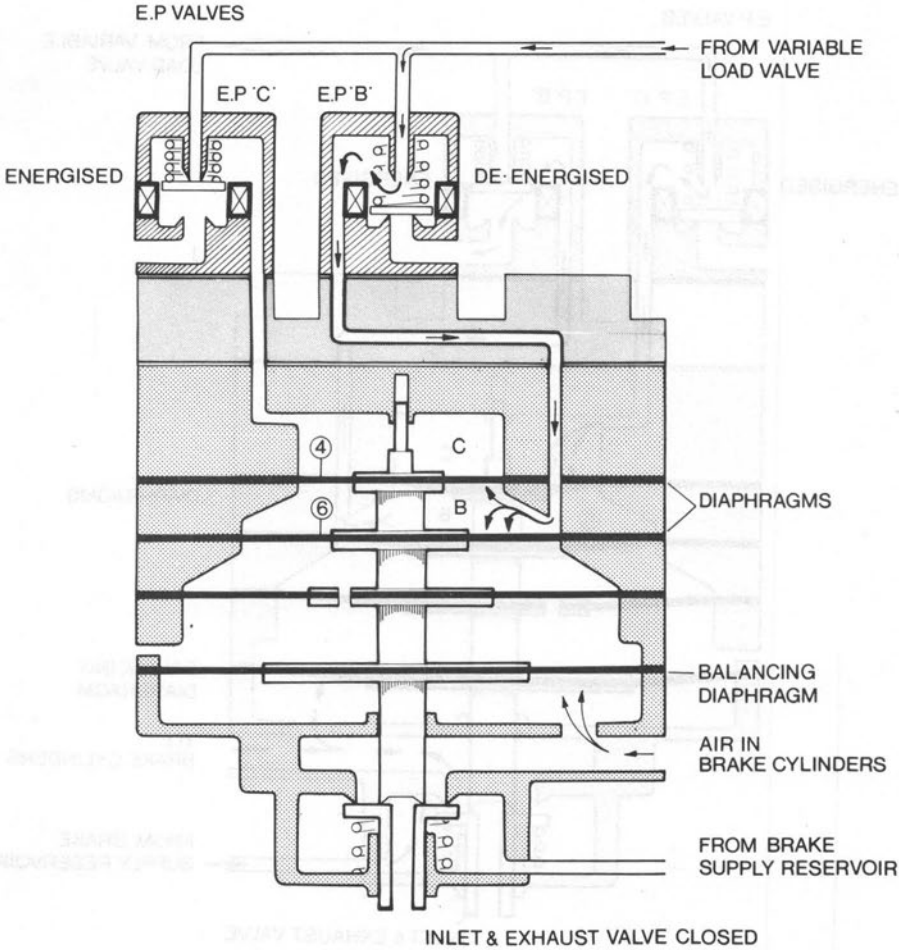

Fig.24 Three step relay valve Step 2.

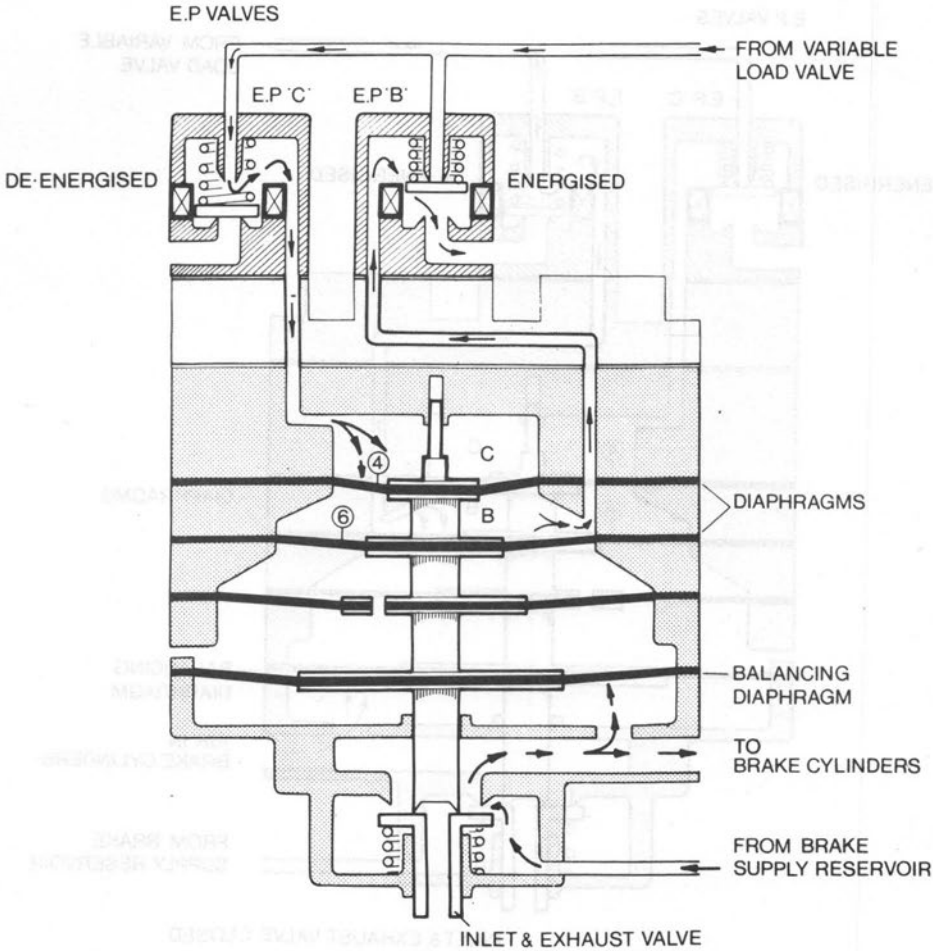

Fig.23 Three step relay valve
Lap

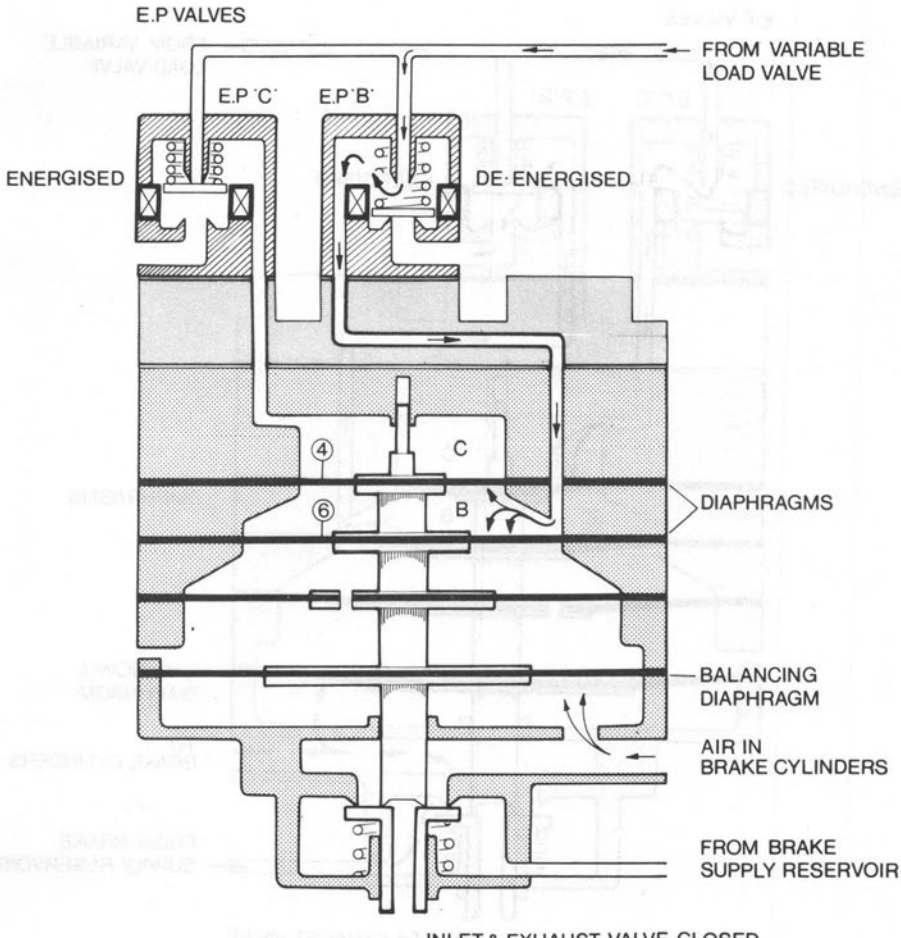

Fig.24 Three step relay valve Step 2.

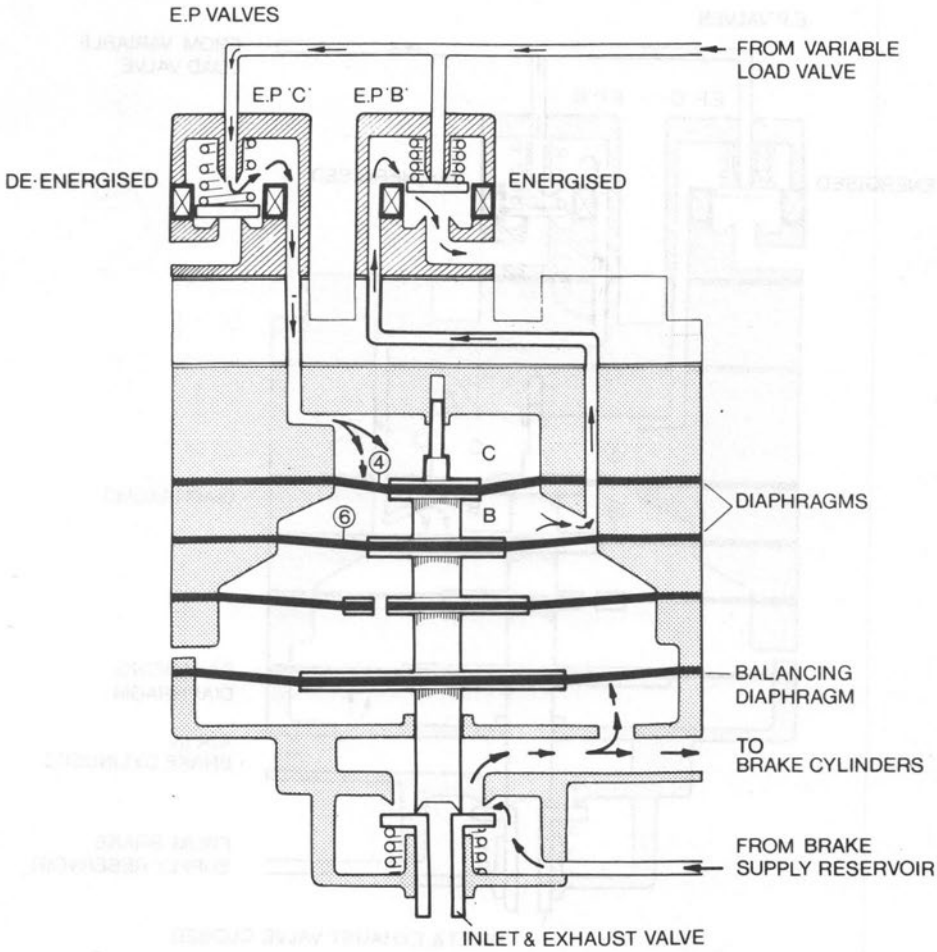

Fig.25 Three step relay valve
Step 3.

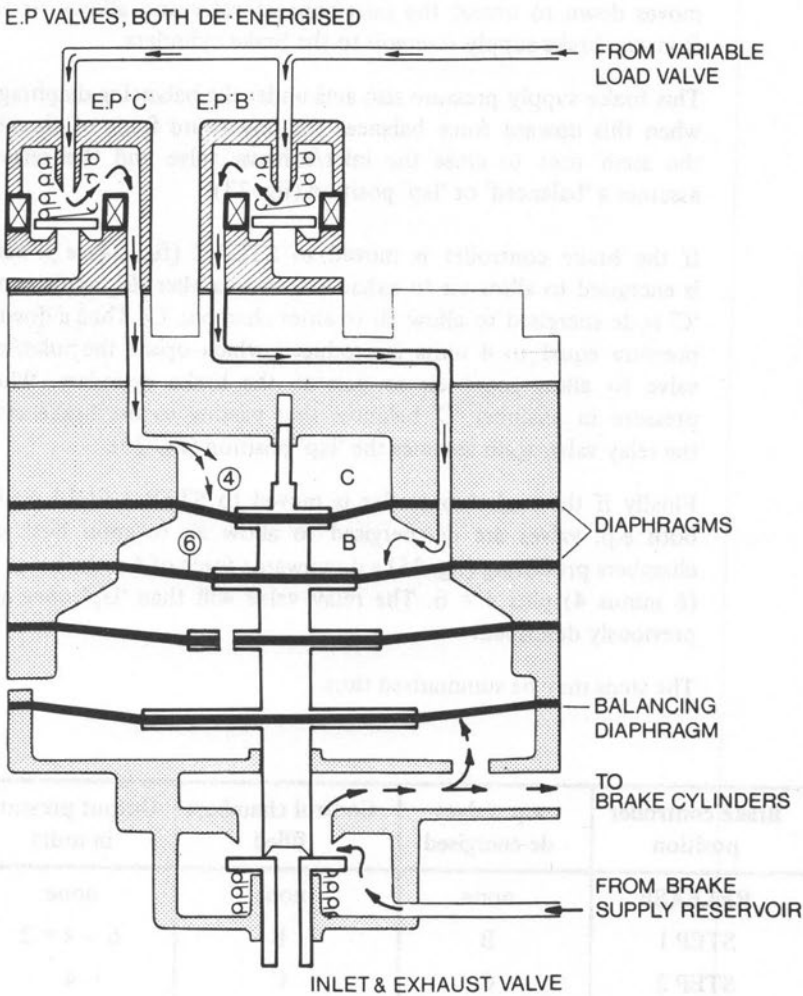

When the driver's brake controller is moved to STEP 1 e.p. valve 'B' is de-energised (see fig. 22) and controlling pressure from the VLV enters chamber 'B' to exert pressure on both diaphragms. Since the lower diaphragm has a greater surface area (equal to 6 units of force) than the upper diaphragm (4 units of force) a downward pressure equal to 2 units of force is produced i.e. 6 minus 4. Thus the stem moves down to unseat the inlet/exhaust valve and allows air to pass from the brake supply reservoir to the brake cylinders.

This brake supply pressure also acts under the balancing diaphragm and when this upward force balances the downward force of chamber 'B' the stem rises to close the inlet/exhaust valve and the relay valve assumes a 'balanced' or 'lap' position (fig. 23).

If the brake controller is moved to STEP 2 (fig. 24) e.p. valve 'B' is energised to allow air to exhaust from chamber 'B', whilst e.p. valve 'C' is de-energised to allow air to enter chamber 'C'. Thus a downwards pressure equal to 4 units is produced which opens the inlet/exhaust valve to allow more air to pass to the brake cylinders. When the pressure in chamber 'C' balances that passing to the brake cylinders the relay valve again assumes the 'lap' position (fig. 23).

Finally if the brake controller is moved to STEP 3/FULL SERVICE both e.p. valves are de-energised to allow air to enter both control chambers producing (fig. 25) a downwards force of 6 units i.e. (6 minus 4) plus 4 = 6. The relay valve will than 'lap' once again as previously described.

The steps may be summarised thus:-

Brake controller position	e.p. valves de-energised	Control chambers filled	Output pressure in units
RELEASE	none	none	none
STEP 1	B	B	6 – 4 = 2
STEP 2	C	C	4
STEP 3	B & C	B & C	(6 –4) + 4 = 6

5.3 When the motor coaches are equipped for dynamic braking a restricted application valve is added to the pipe bracket (see fig. 26) and the output from the 3 step relay valve, which passed direct to the brake cylinders (see fig. 16), is now directed to the restricted application valve (RAV).

Fig.26 Westcode brake unit Motor Cars
with dynamic braking

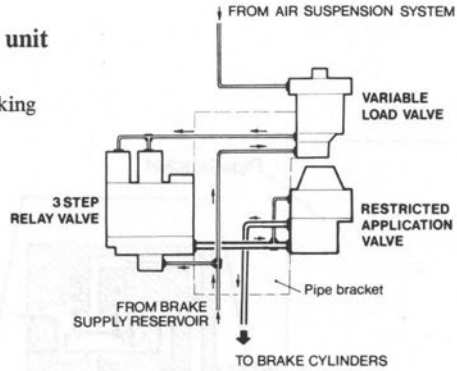

The principles of dynamic braking are explained in Section 6 of this booklet, basically the d.c. traction motors are used as 'generators' to produce a retardation or braking effect but whilst this is being established electrically it is necessary to initiate a normal air brake application.

Referring to fig. 27 it will be seen that the output from the 3 step relay valve enters the top of the RAV and, through the de-energised e.p. valve, enters the chamber above the diaphragm. This pressure pushes down the stem to open the inlet/exhaust valve and provides an unrestricted connection between the relay valve and the brake cylinders.

Once dynamic braking has been established and a retarding effect is present, the brake control circuits energise the e.p. valve of the RAV and the pressure from the chamber above the diaphragm is exhausted (see fig. 28). The pressure that has been supplied to the brake cylinders and to the chamber below the diaphragm now lifts the stem and allows the air that has reached the brake cylinders to exhaust to atmosphere.

As the reducing pressure in the brake cylinders acts below the diaphragm this is countered by the downward effect of the main spring which pushes the stem down to seat on the hollow-stemmed inlet/exhaust valve as shown in fig. 29.

Fig.27 Restricted application valve
Initiate braking

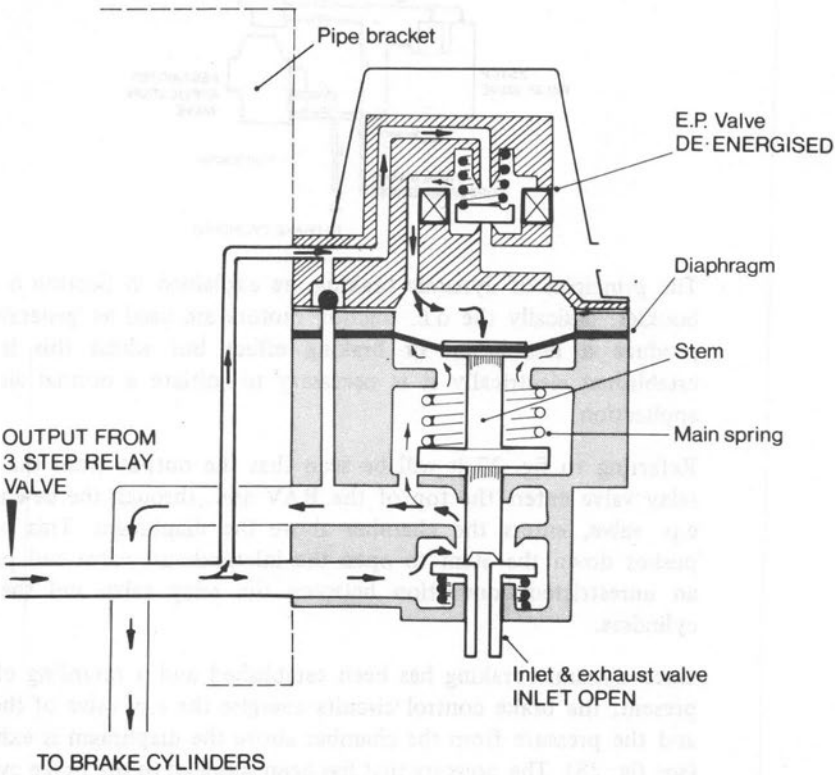

Fig.28 Restricted application valve

Dynamic brake in use

Brake cylinder pressure reducing

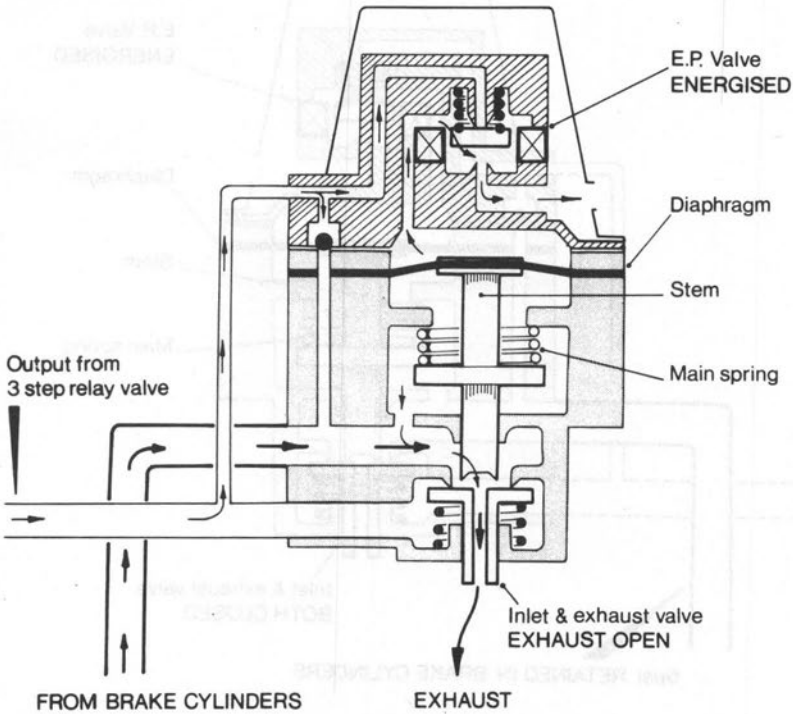

Fig.29 Restricted application valve

Dynamic brake in use

Balanced condition

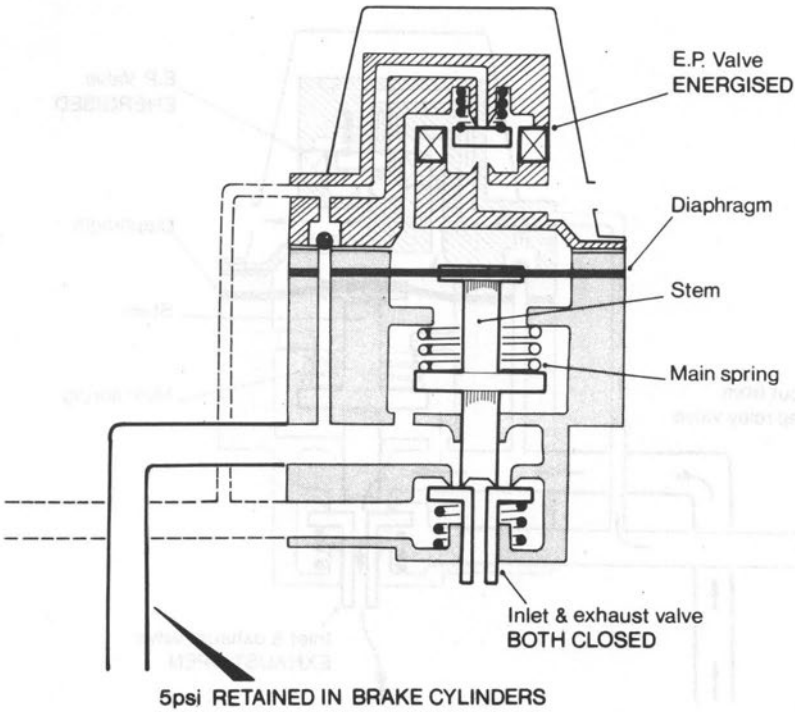

Fig.30 Restricted application valve

Brake release during dynamic brake sequence

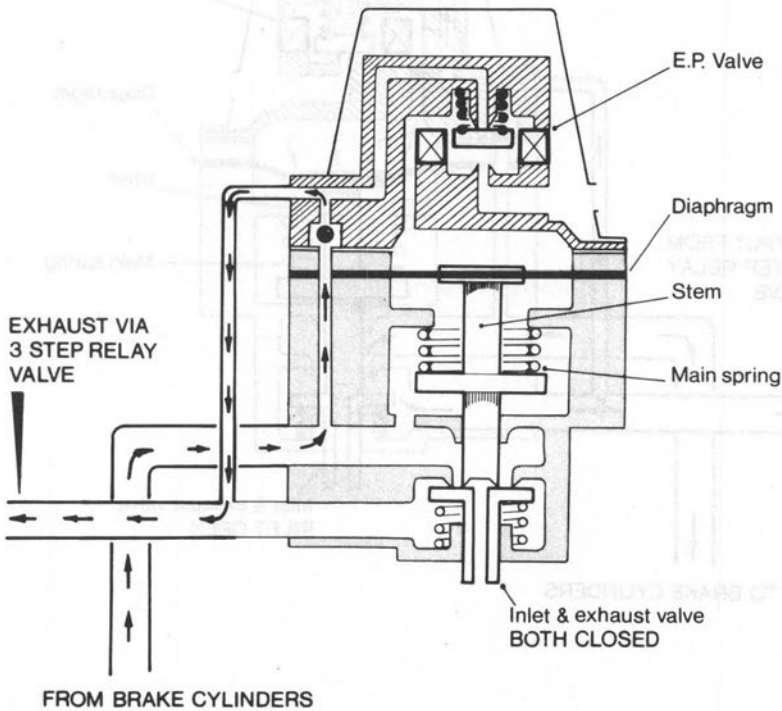

Fig.31 Restricted application valve

Dynamic brake not operative
or train speed reduced below 18–20 m.p.h.

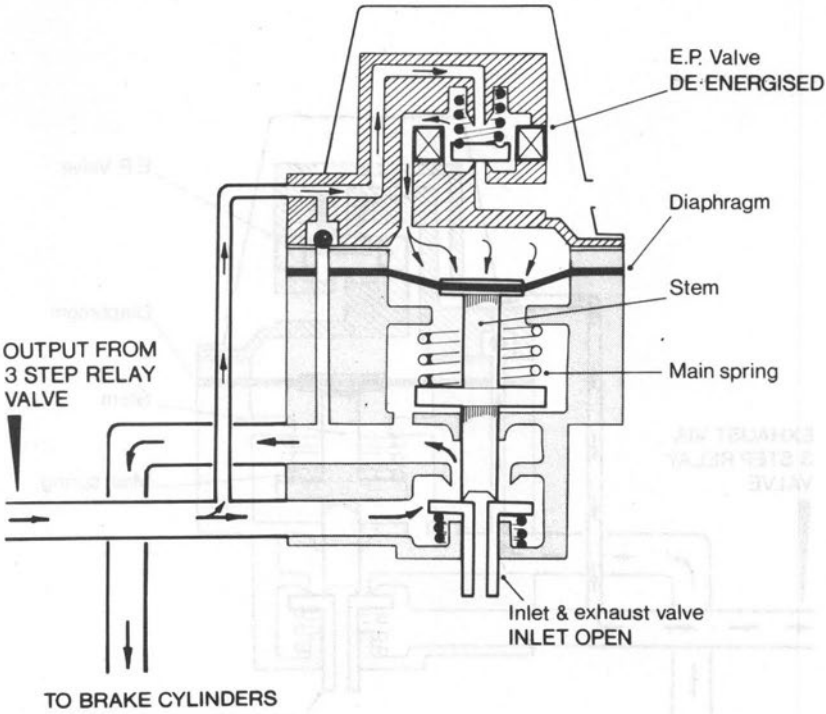

The spring pressures and diaphragm areas are so designed that 5 p.s.i. is retained in the brake cylinders, even though dynamic braking has been established, when the RAV is in the 'balanced' condition as depicted in fig. 29. This ensures that if the dynamic brake becomes ineffective the brake pads are in contact with the brake discs in readiness for normal air braking.

If the brake controller is put to 'release' during a period of dynamic braking e.g. after speed has had to be reduced for a temporary restriction, it is necessary to release the 5 p.s.i. that has been retained in the brake cylinders. The output from the relay valve will now exhaust (fig. 30) and the 5 p.s.i. will push the ball valve off its seat and exhaust via the relay valve as shown.

Dynamic braking ceases to be effective once the train speed is reduced to 18-20 m.p.h. and the brake control circuits de-energise the RAV e.p. valve (fig. 31). This allows output pressure from the relay valve to enter the chamber above the diaphragm and push the stem down, opening the inlet/exhaust valve and allowing unrestricted passage of air from the relay valve to the brake cylinders, the actual pressure being determined by the relay valve and the position of the driver's brake controller.

The fact that the e.p. valve of the RAV is de-energised 'open' provides a 'fail-safe' feature in that output pressure from the 3 step relay valve will immediately push down the stem as shown in fig. 31 to provide the unrestricted connection to the brake cylinders via the now-open inlet/exhaust valve.

6. THE DYNAMIC BRAKE

It is well known that on diesel locomotives with d.c. electric transmission the diesel engine can be started by 'motoring' the main generator i.e. using it as a starter motor. This is achieved by connecting the battery to the generator field and armature windings thus making the generator, for a short period, into a very powerful motor with sufficient torque to rotate the diesel engine crankshaft during the starting process.

Such a conversion principle can be applied to a d.c. traction motor. By applying a voltage to the field windings only whilst the train is coasting the motor is converted into an effective generator, the revolving armature driven by the train's momentum being capable of a high electrical output. If this output is fed into resistances which, as the name implies offer a resistance

to current flow, a corresponding resistance will be met by the armature forcing it to slow down. Therefore a traction motor used in this way will exert a retarding effect on the train and, if a sufficient number of axles are motored, their combined effect will be sufficient to brake the train. As the train speed falls their effectiveness as generators naturally reduces and at 18-20 m.p.h. their use ceases and normal air braking takes over.

The dispersal of electrical energy by passing it through resistances to produce heat requires fans to blow cool air across them much like a domestic fan heater, and in fact this heat can be used to supplement the normal coach heating. However the main advantage of dynamic braking is the extended life given to the brake pads of the motor coaches, thereby reducing maintenance costs.

6.1 The principle is illustrated by fig. 32 and in practice is applied to the motor coaches of Class 507 and 508 d.c. trains and Class 313 a.c./d.c. trains. When the driver moves his brake controller to select a braking step, the normal air braking is initiated through the Westcode brake unit. At the same time however a 'power brake switch' connects the traction motors through resistances (braking resistors), whilst another contact within the brake control circuits closes to energise the traction motor field windings. This particular circuit, known as the field injection supply, enables the traction motors to 'generate' and once electrical energy is being generated to produce the required retarding effect a 'current measurement' is fed back to the brake control circuits to energise the restricted application valve (RAV) i.e. dynamic braking has been established and detected so the normal air braking is not required.

The dynamic braking effort has to exactly match that produced by normal air braking, so that the driver has exactly the same response from his brake controller irrespective of which form of braking is in use.

This is achieved by the 'pressure transducer' connected to the output of the 3 step relay valve, which converts the output pressure of each brake step into a voltage appropriate to each brake step i.e. the position of the driver's brake controller. The brake control circuits then compare the voltage being generated by the traction motors (which is passing through the braking resistors and shown as 't.m. current measurement' on fig. 32) with the voltage produced by the pressure transducer.

As the train speed falls the current generated by the traction motors, and hence the braking effort, reduces therefore an 'inbalance' is detected by the brake control circuits and they activate the static notching relay (SNR) which in turn operates the camshaft actuator. The actuator rotates the camshaft to switch 'in' (or 'out') more or less resistances to 'match' the retarding effect of the traction motors to the 'brake step voltage' of the pressure transducer, and maintain it as the train speed continues to fall.

Similarly if the position of the brake controller is altered so does the brake step voltage and the brake control circuits immediately detect an inbalance and activate the SNR to alter the resistances to 'match', and then maintain, the retardation to suit the braking step now selected.

As the train speed falls still further a stage is reached when insufficient electrical energy is being generated to provide the required retarding effect. Therefore at 18-20 m.p.h. the brake control circuits de-energise the restricted application valve (RAV) of each brake control unit and normal air braking takes over, the traction motors playing no further part in the braking sequence.

It should be noted that because the air brake and the dynamic brake are designed to produce identical braking rates, any failure of the dynamic brake system during a braking sequence will de-energise the RAV and immediately brake cylinder pressure will be supplied appropriate to the brake step selected by the driver, therefore there should be no surges or snatches through the train as the braking changes from dynamic to air.

An interesting feature of the dynamic brake circuitry is that the output voltage from traction motors 1 and 2 is used to provide the field for motors 3 and 4, and vice-versa. Thus the field injection supply is only momentary and once 'started', the traction motors provide their own current to their fields to enable them to generate.

Fig.32 Dynamic braking principle

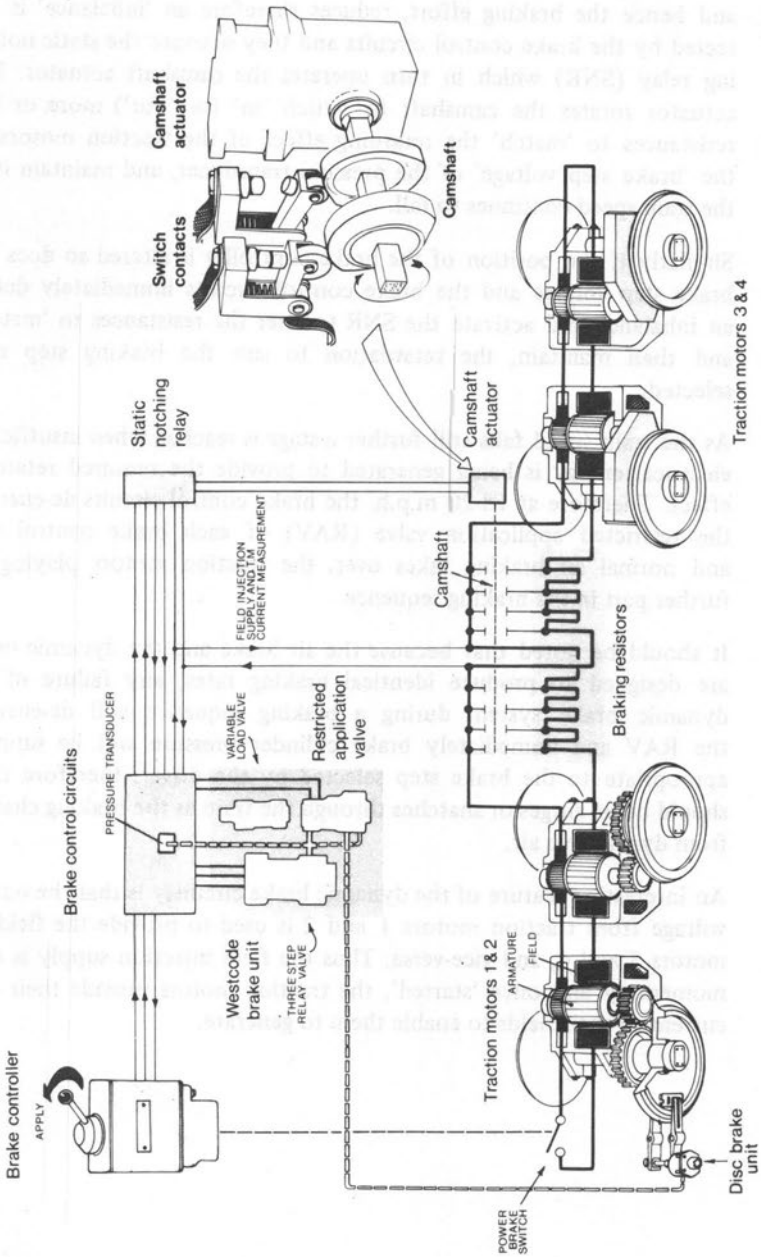

7. WHEELSLIDE PROTECTION (WSP)

Wheelslide protection is provided to momentarily release the brake application on a particular wheel set should the wheels 'pick up' or 'lock' during a brake application.

On the end of each axle there is a device (see fig. 6) which sends a signal to the WSP electronic equipment all the time the axle is rotating. Signals from all four axles are compared and if the signal from any one or more ceases i.e. an axle has ceased to rotate, the brakes are momentarily released on the axles affected, to be re-applied as soon as the signal is restored to the electronic equipment i.e. the axle is again rotating.

The brake release and re-application is achieved through a WSP blowdown valve, positioned between the Westcode brake unit and the brake cylinders.

Fig.33 WSP Blowdown valve
Normal position

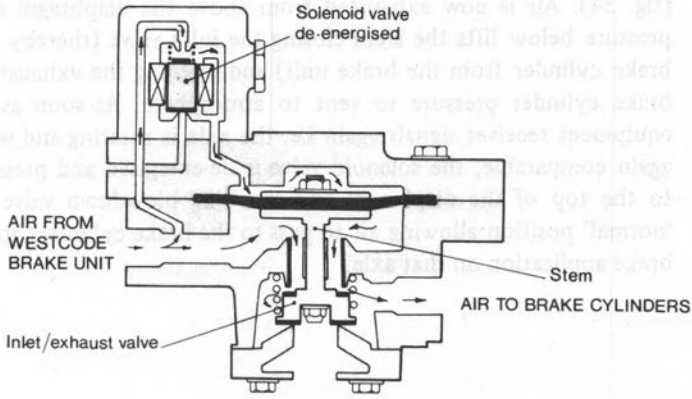

In the 'normal' position the solenoid valve is de-energised and air from the Westcode brake unit en-route to the brake cylinders passes through the solenoid valve to the chamber above the diaphragm (see fig. 33) as well as that below the diaphragm, thus there is equal pressure above and below and the spring holds the stem down and the inlet/exhaust valve closed.

Fig.34 Exhaust position

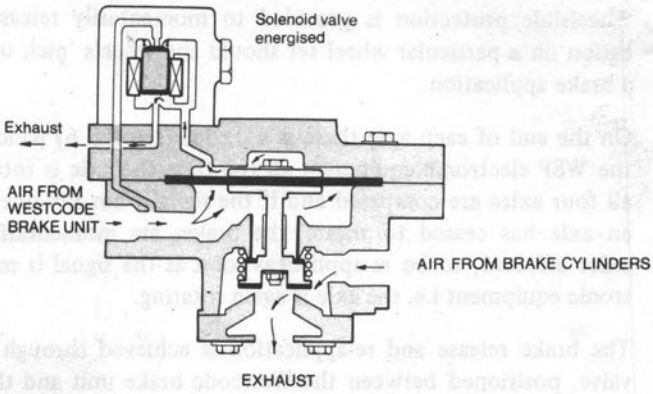

If the wheel speeds differ materially, or excessive decelleration of ALL wheels occurs, then the WSP electronic equipment energises the solenoid valve (fig. 34). Air is now exhausted from above the diaphragm and the greater pressure below lifts the stem closing the inlet valve (thereby cutting off the brake cylinder from the brake unit) and opening the exhaust valve to allow brake cylinder pressure to vent to atmosphere. As soon as the electronic equipment receives signals again i.e. the axle is rotating and wheel speeds are again comparable, the solenoid valve is de-energised and pressure is restored to the top of the diaphragm and the WSP blowdown valve reverts to the 'normal' position allowing air to pass to the brake cylinders and reimpose the brake application on that axle.